18. Valve Rocker Assembly

A: REMOVAL

NOTE:
Perform the work with the engine installed to body when replacing a single part. Refer to “Valve Clearance” for preparation. <Ref. to ME(H4SO)-29, Valve Clearance.>

1) Remove the V-belts. <Ref. to ME(H4SO)-39, REMOVAL, V-belt.>
2) Remove the crank pulley. <Ref. to ME(H4SO)-41, REMOVAL, Crank Pulley.>
3) Remove the timing belt cover. <Ref. to ME(H4SO)-42, REMOVAL, Timing Belt Cover.>
4) Remove the timing belt. <Ref. to ME(H4SO)-43, REMOVAL, Timing Belt.>
5) Remove the cam sprocket. <Ref. to ME(H4SO)-48, REMOVAL, Cam Sprocket.>
6) Disconnect the PCV hose and remove the rocker cover.
7) Remove the valve rocker assembly.
   (1) Use the ST to rotate the spring stopper in the direction of the arrow to remove it from adjuster pin.

ST 18258AA000 SPRING INSTALLER

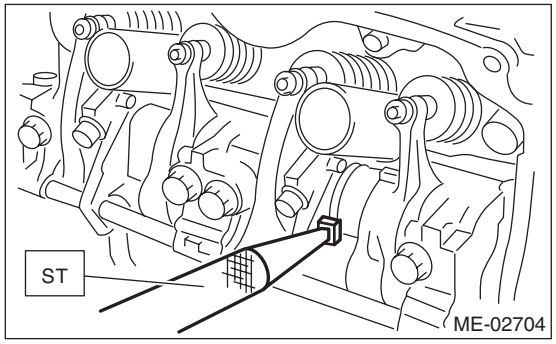

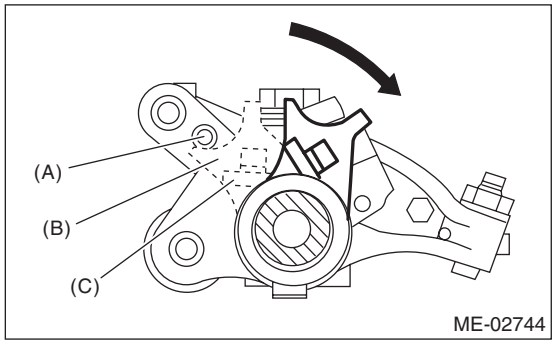

(A) Adjuster pin
(B) Spring stopper
(C) Spring

   (2) Remove the bolts (a) through (j) in alphabetical sequence.

NOTE:
Leave two or three threads of bolts (i) and (j) engaged in order to retain the valve rocker assembly.

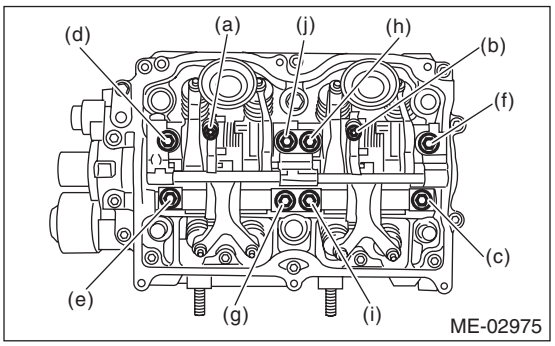

   (3) Remove the valve rocker assembly.

NOTE:
Set the ST in the position shown in the drawing to remove the intake valve rocker assembly.

ST 18354AA000 VALVE ROCKER HOLDER

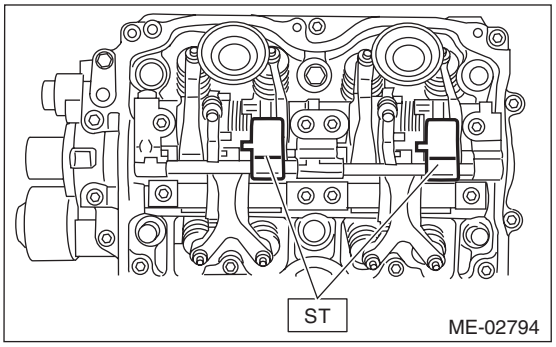

B: INSTALLATION

1) Install the valve rocker assembly.
   (1) Temporarily tighten the bolts equally in alphabetical order as shown in the figure.

NOTE:
- Do not temporarily tighten the bolts (i) and (j).
- Set the ST in the position shown in the drawing to mount the intake valve rocker assembly.

ST 18354AA000 VALVE ROCKER HOLDER

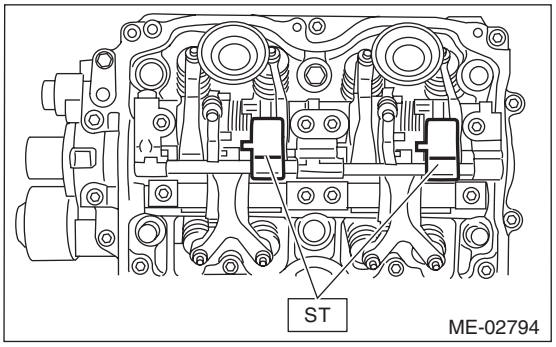

(2) Tighten the bolts (a) through (h) to specified torque.

Tightening torque:
25 N·m (2.5 kgf-m, 18.4 ft-lb)

(3) Tighten the bolts (i) through (j) to specified torque.

Tightening torque:
6 N·m (0.6 kgf-m, 4.3 ft-lb)

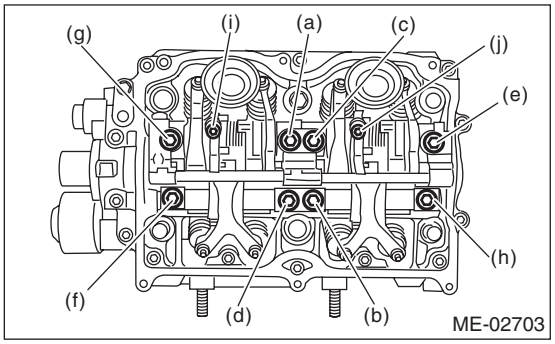

(4) Use the ST to rotate the spring stopper in the direction of the arrow, and hold to the adjuster pin.

ST 18258AA000 SPRING INSTALLER

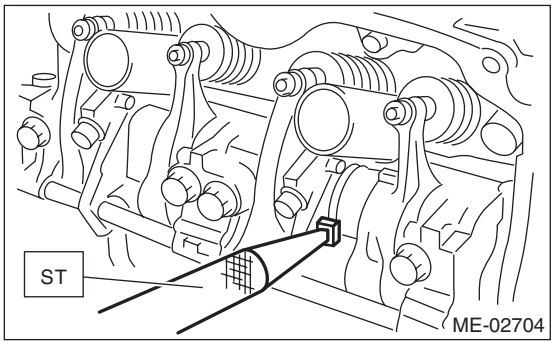

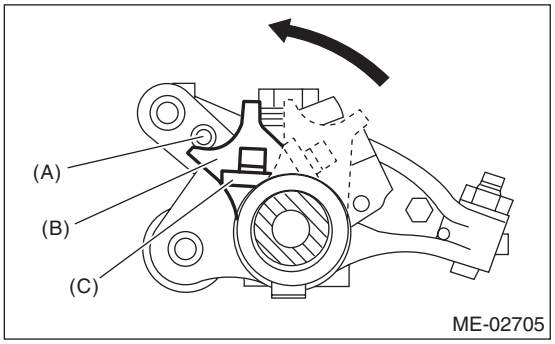

(A) Adjuster pin
(B) Spring stopper
(C) Spring

2) Install the cam sprocket. <Ref. to ME(H4SO)-48, INSTALLATION, Cam Sprocket.>
3) Install the timing belt. <Ref. to ME(H4SO)-44, INSTALLATION, Timing Belt.>
4) Adjust the valve clearance. <Ref. to ME(H4SO)-30, ADJUSTMENT, Valve Clearance.>
5) Install the rocker cover and rocker cover gasket, and then connect PCV hose.

NOTE:
- Use a new rocker cover gasket.
- Tighten the bolts in two stages in alphabetical sequence as shown in figure.

Tightening torque:
1st
6.4 N·m (0.65 kgf-m, 4.7 ft-lb)
2nd (only (a) and (b) are tightened)
6.4 N·m (0.65 kgf-m, 4.7 ft-lb)

- RH side

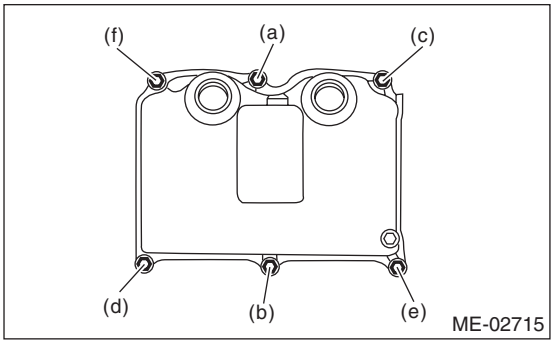

- LH side

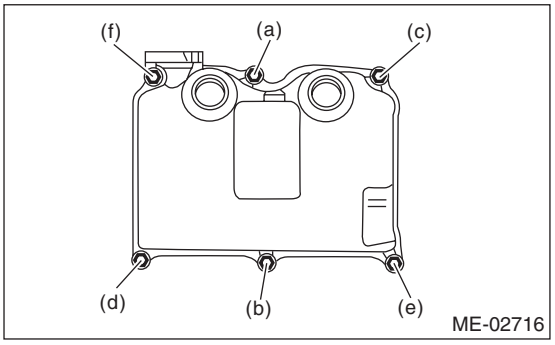

6) Install the timing belt cover.
<Ref. to ME(H4SO)-42, INSTALLATION, Timing Belt Cover.>
7) Install the crank pulley. <Ref. to ME(H4SO)-41, INSTALLATION, Crank Pulley.>
8) Install the V-belts. <Ref. to ME(H4SO)-39, INSTALLATION, V-belt.>

C: DISASSEMBLY

NOTE:
Intake valve rocker assembly cannot be disassembled.

1) Remove the exhaust valve rocker arm from the rocker shaft.

NOTE:
Keep all the removed parts in order for re-installing in their original positions.

2) Remove the nut and adjusting screw from the valve rocker.

D: ASSEMBLY

NOTE:
Intake valve rocker assembly cannot be disassembled.

1) Install the adjusting screw and nut to the exhaust valve rocker arm.
2) Insert the exhaust valve rocker arm to rocker shaft.

NOTE:
Valve rocker arms, and rocker shaft have identification marks. Make sure the parts with same markings are properly assembled.

E: INSPECTION

1. INTAKE VALVE ROCKER ASSEMBLY

1) If the roller or valve contact surface of valve rocker arm is worn or dented excessively, replace the valve rocker assembly.
2) Check the valve rocker arm roller for smooth rotation. If not, replace the valve rocker assembly.

2. EXHAUST VALVE ROCKER ASSEMBLY

1) Measure the inner diameter of valve rocker arm and outer diameter of valve rocker shaft, and confirm the difference (oil clearance) between the two values.

Clearance between arm and shaft:
Standard:
0.020 — 0.054 mm (0.0008 — 0.0021 in)
Service limit:
0.10 mm (0.0039 in)

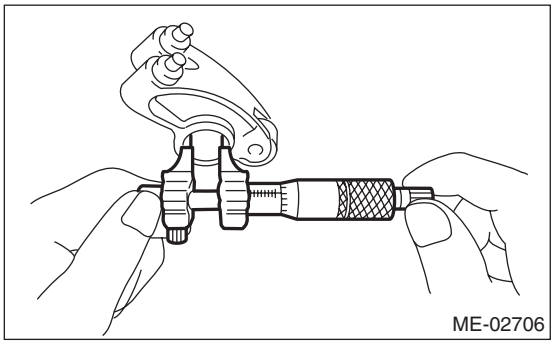
ME-02706

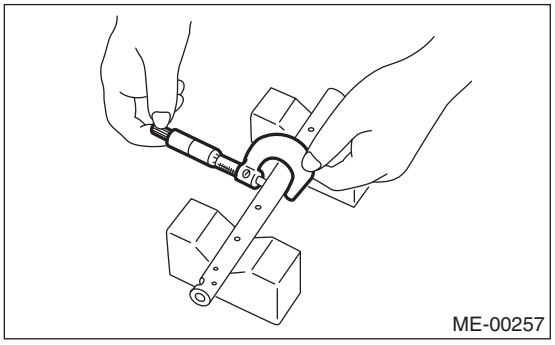
ME-00257

2) If the oil clearance exceeds the limit, replace the valve rocker arm or shaft, whichever shows the greater amount of wear.

Rocker arm inside diameter:
22.020 — 22.041 mm (0.8669 — 0.8678 in)

Rocker shaft diameter:
21.987 — 22.000 mm (0.8656 — 0.8661 in)

3) If the cam or valve contact surface of valve rocker arm is worn or dented excessively, replace the valve rocker arm.
4) Check the valve rocker arm roller for smooth rotation. If not, replace the valve rocker arm.